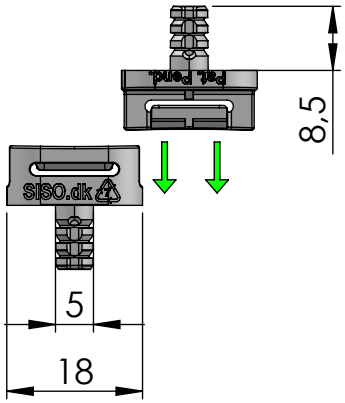

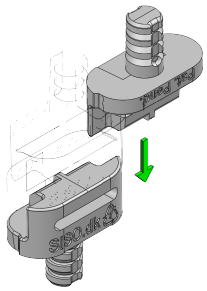

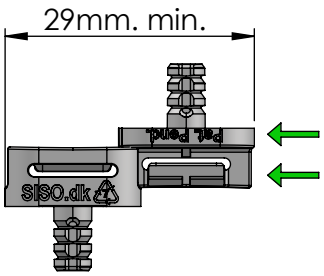

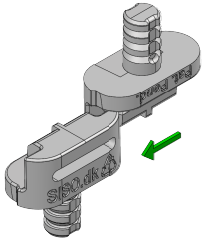

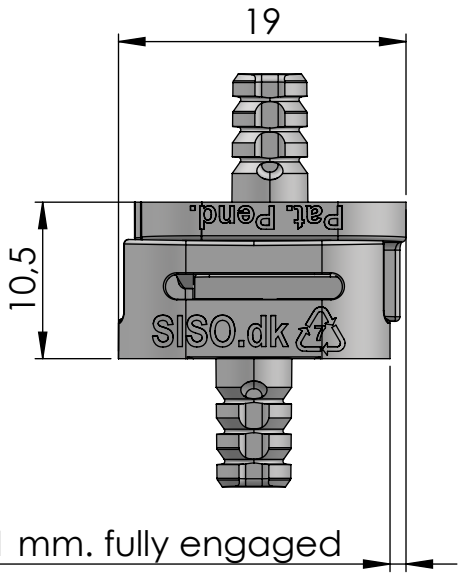

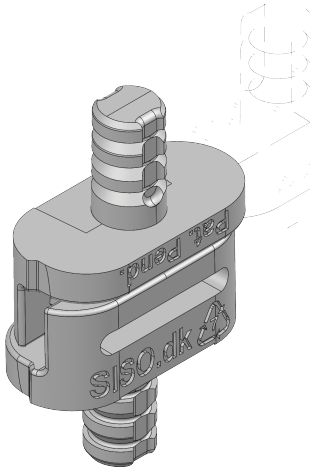

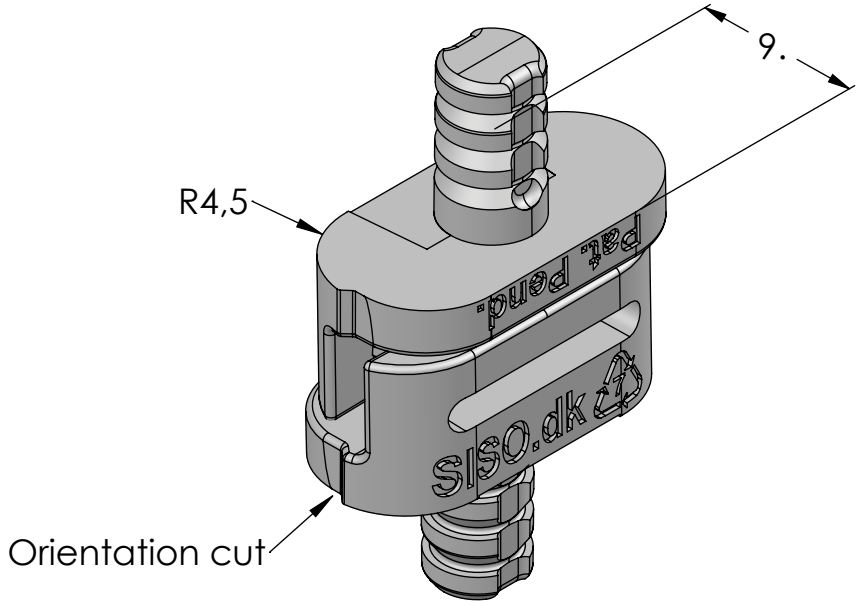

Notice: Orientation cut pointing in the same direction.

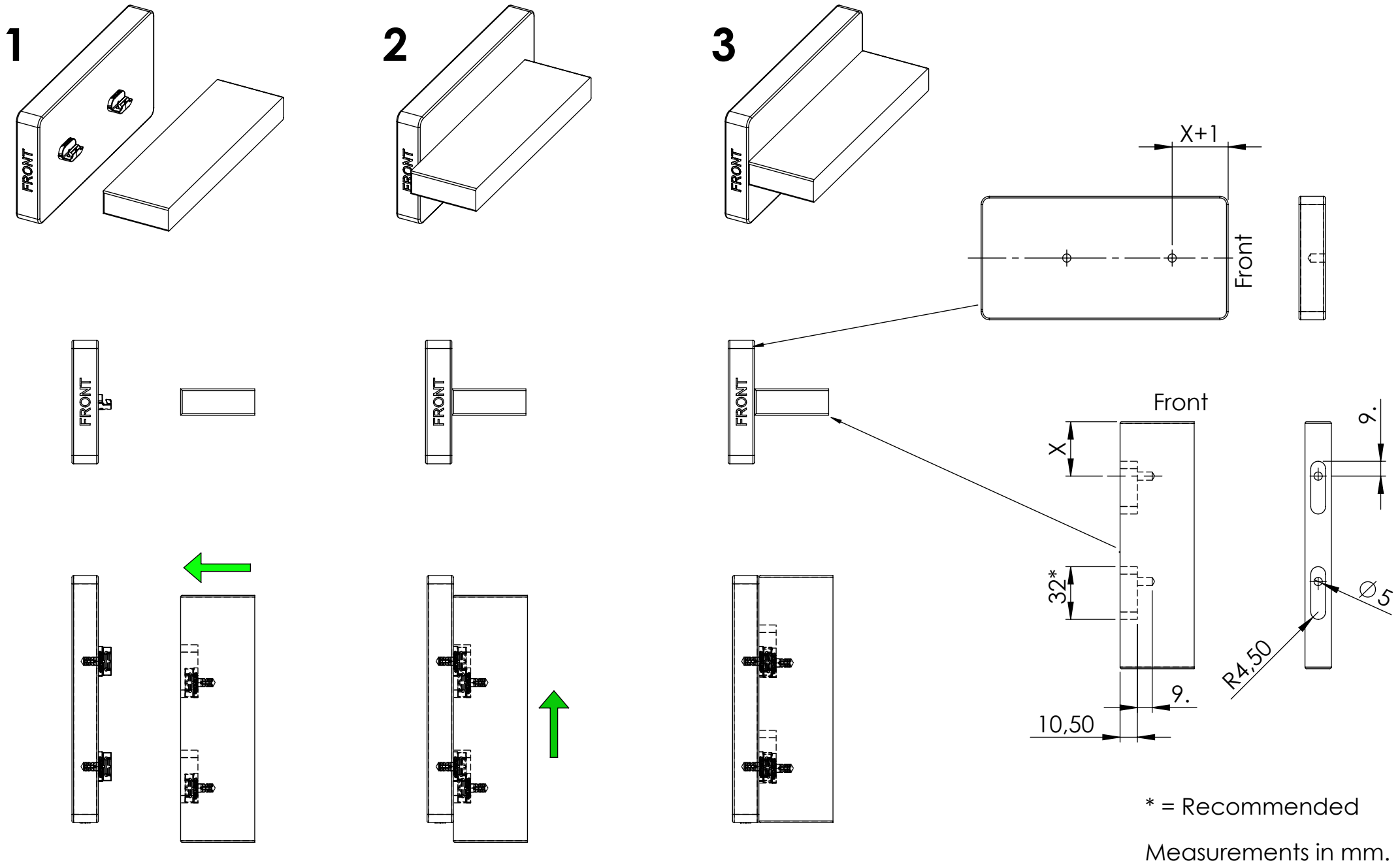
1
2
3
FRONT
X+1
Front
X
32*
9.
10,50
R4,50
∅5
* = Recommended
Measurements in mm.

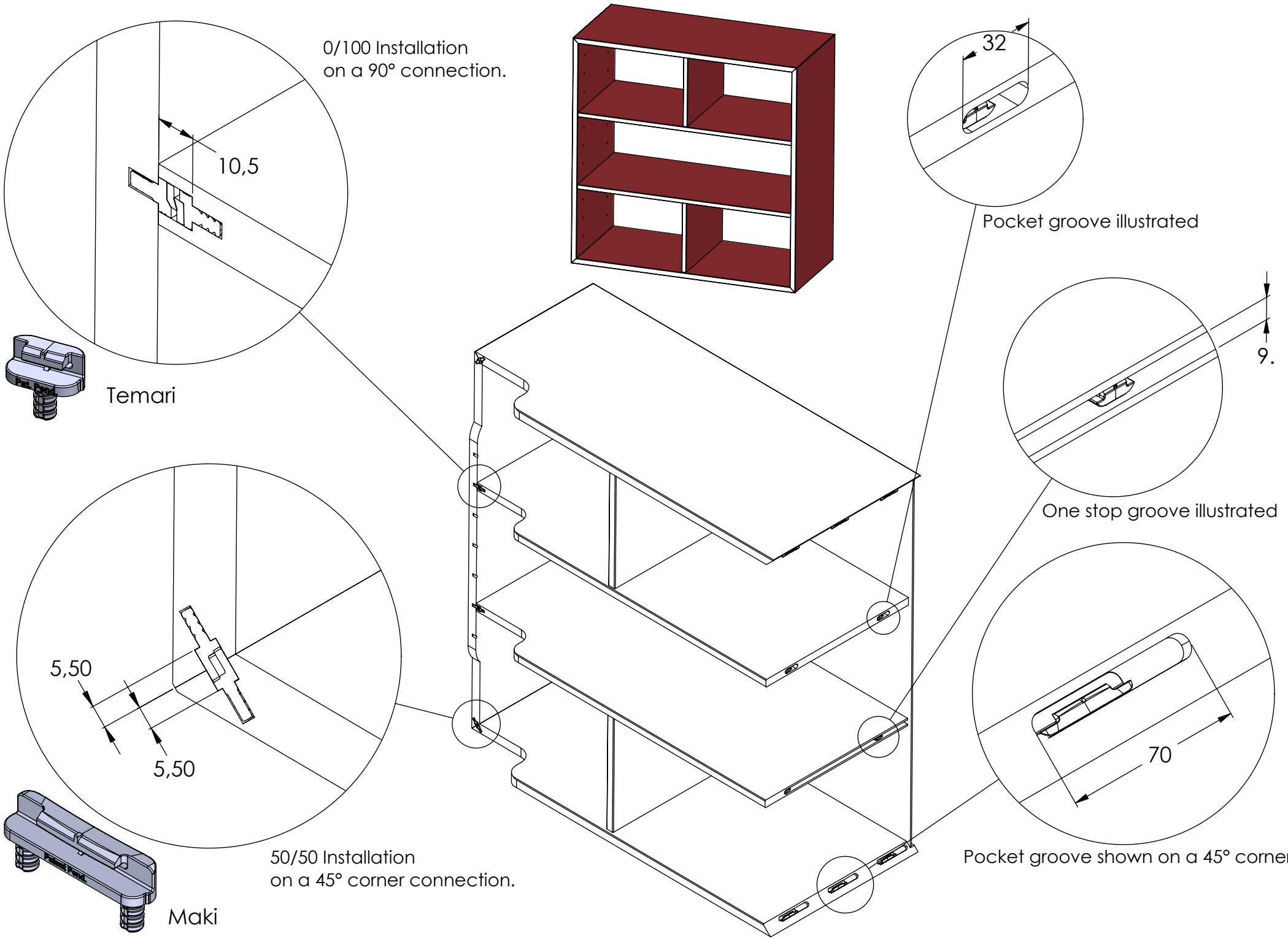
0/100 Installation
on a 90° connection.
10,5
Temari
Pat. Pend.
32
Pocket groove illustrated
9.
One stop groove illustrated
5,50
5,50
50/50 Installation
on a 45° corner connection.
Maki
Patent Pend.
70
Pocket groove shown on a 45° corner